10641 Highway 36
Covington, GA
30014

www.sunbeltbuilders.com

t 770.786.3031
f 770.786.3046

NEWTON COUNTY FLEET & PUBLIC WORKS

WCS
9548 Tara Blvd.
Jonesboro, GA 30236
ph: 770-478-7781
Kenny Miles
kenny@wcsdiv10.com

10-2113 Toilet Partitions & Accessories O&M

Paper Towel Dispenser (Multi - C-Fold) – Surface Mounted - Matte Black Powder Coated Stainless Steel

Paper Towel Dispensers | *MATTE BLACK*

MasterFormat Section 10 28 13

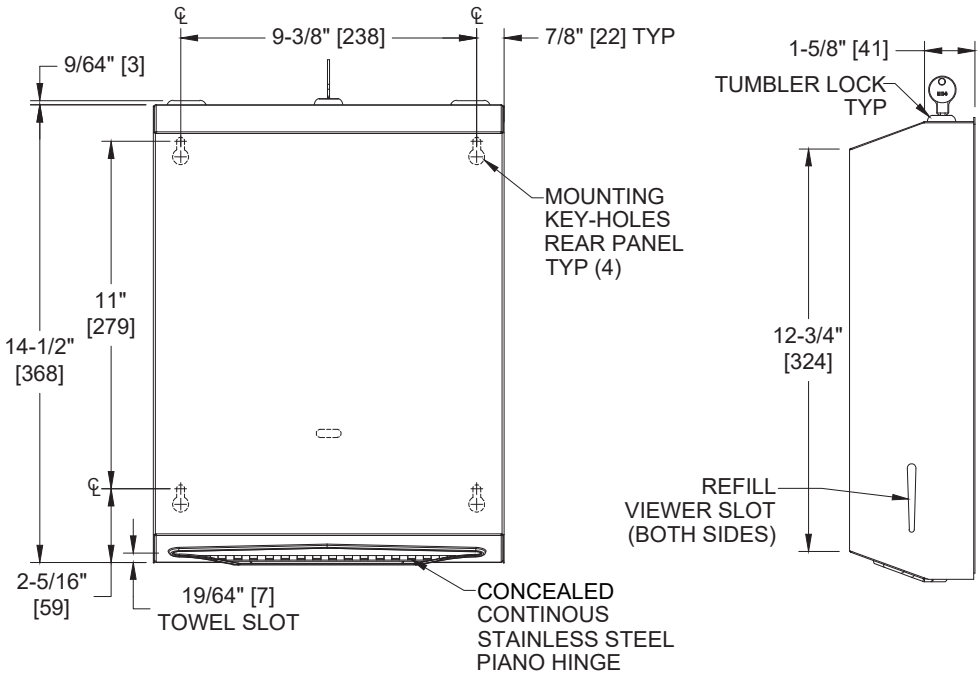

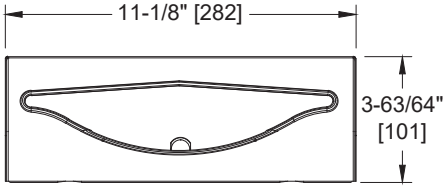

NOTE:
ALL DIM'S INCH [MM]
ILLUSTRATION FOR REF ONLY AND NTS
FOR CLEANING INSTRUCTIONS SEE APPROPRIATE SECTIONS IN PRODUCT CARE & MAINTENANCE BULLETIN (PCM) ON ASI WEBSITE

Scan for Information

Sustainability/LEED

MR 4.1 (1) MR 6 (1) EQ 4.2 (1)
MR 4.2 (1) EQ 4.1 (1) EQ 4.4 (1)

Product Overview

Fabricated of Matte Black Powder Coated 22 gauge stainless steel, this unit dispenses 400 C-fold or 525 multi-fold paper towels without adjustment or adapters and is fitted with tumbler lock and heavy-duty stainless steel piano hinge.

Key Features & Specifications

- Works well in any setting
- Heavy duty stainless steel piano hinge
- Type 304 Stainless Steel - Matte Black Powder Coated
- Surface Mounted
- Pull Type
- 400 C-Fold or 525 Multi-Fold

Operation & Maintenance

Towels are self-feeding as withdrawn by hand until supply is depleted. Unit may be reloaded with a partial load in-place and will continue to feed properly. Low level of towel supply is indicated from 25% capacity to empty. Locking door prevents unauthorized access or removal.

Technical Information / Product Properties

Property	Value
Dimensions	11-1/8" [282] W x 14-5/8" [368] H x 3-63/64" [101] D
Construction	Type 304 Stainless Steel - Matte Black Powder Coated Heavy duty stainless steel piano hinge
Power	N/A
Operation	Pull Type
Mounting	Surface Mounted
Capacity	400 C-Fold OR 525 Multi-Fold

Installation

Surface mount unit on wall or partition using five #10 self-threading screws (by others) through concealed mounting holes provided. Four mounting holes through back are keyhole slots for ease in hanging unit on pre-installed screws. Center top mounting hole is horizontal slot for ease of adjustment and vandal resistant locking. For compliance with 2010 ADA Accessibility Standards install unit so that centerline of towel dispenser slot is 48" [1219] maximum above finished floor (AFF).

Warranty

One (1) Year from date of Invoice

Manufacturer reserves the right to make changes to the design, dimensions or functionality of the product without formal notice.

Toilet Tissue Holder (Double) – Chrome Plated – Surface Mounted

Toilet Tissue Dispensers

MasterFormat Section 10 28 13

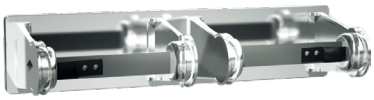

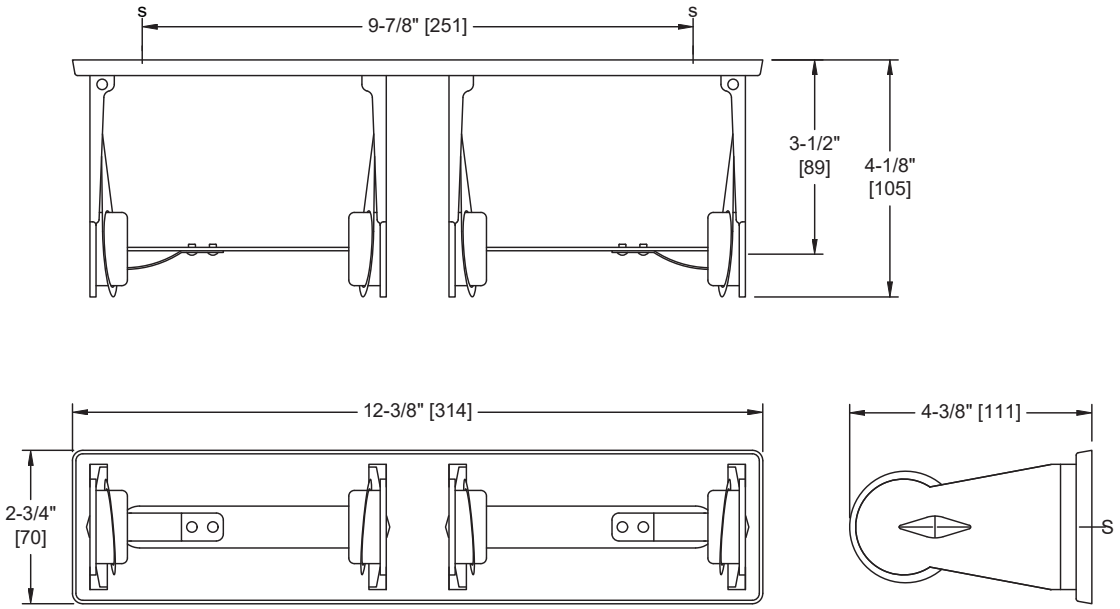

NOTE:
ALL DIM'S INCH [MM]
ILLUSTRATION FOR REF ONLY AND NTS

Scan for Information

SUSTAINABILITY/LEED

MR 4.1 (1) MR 6 (1) EQ 4.2 (1)
MR 4.2 (1) EQ 4.1 (1) EQ 4.4 (1)

PRODUCT OVERVIEW

Holds two (2) rolls of standard core size toilet tissue up to 6" diameter [Ø152] and 4-1/8" [105] to 4-3/4" [121] wide. Unit fabricated of polished chrome-plated steel. Roll shall be non-removable until roll is depleted. Brake springs shall allow free delivery for each roll of toilet paper while preventing over-spin paper roll-off due to fast-pull. Roll is replaced on a cycle determined by maintenance needs. Roll cores prevent access to release catches and must be removed to allow end support arms to swing away for service roll replacements.

KEY FEATURES & SPECIFICATIONS

- Double Roll Dispenser
- 18 Gauge Chrome Plated Steel with High Polish
- Surface Mounted

Operation & Maintenance

Toilet paper is dispensed with free delivery from each roll while preventing over-spin from fast-pull. Roll is replaced on a cycle determined by maintenance needs. Roll cores prevent access to release catches and must be removed to allow end support arms to swing away for service roll replacements.

Technical Information / Product Properties

Property	Value
Dimensions	12-3/8" [314] W x 2-3/4" [70] H x 4-1/4" [108] D
Construction	18 Gauge Chrome Plated Steel with High Polish
Mounting	Surface Mounted
Capacity	Holds two (2) rolls of standard core roll toilet paper up to 6" Dia. [Ø152]

Installation

For general utility, mount unit 32" [813] AFF (Above Finished Floor) from center line of holder. Surface mount and secure holder to wall with two (2) #10 self threading screws (supplied by others) through mounting slots in back plate. For compliance with 2010 ADA Accessibility Standards and 2015 ABA Standards install unit so that center line of roll is 7" [178] min front of the water closet to 9" [229] max and outlet of roll is 15" [381] min AFF to 48" [1219] max AFF.

Options

Warranty

One (1) Year from date of Invoice

Manufacturer reserves the right to make changes to the design, dimensions or functionality of the product without formal notice.

Snap Flange Grab Bar with White Powder Coated Finish - 36" [914] Length

Grab Bars

MasterFormat Section 10 28 13

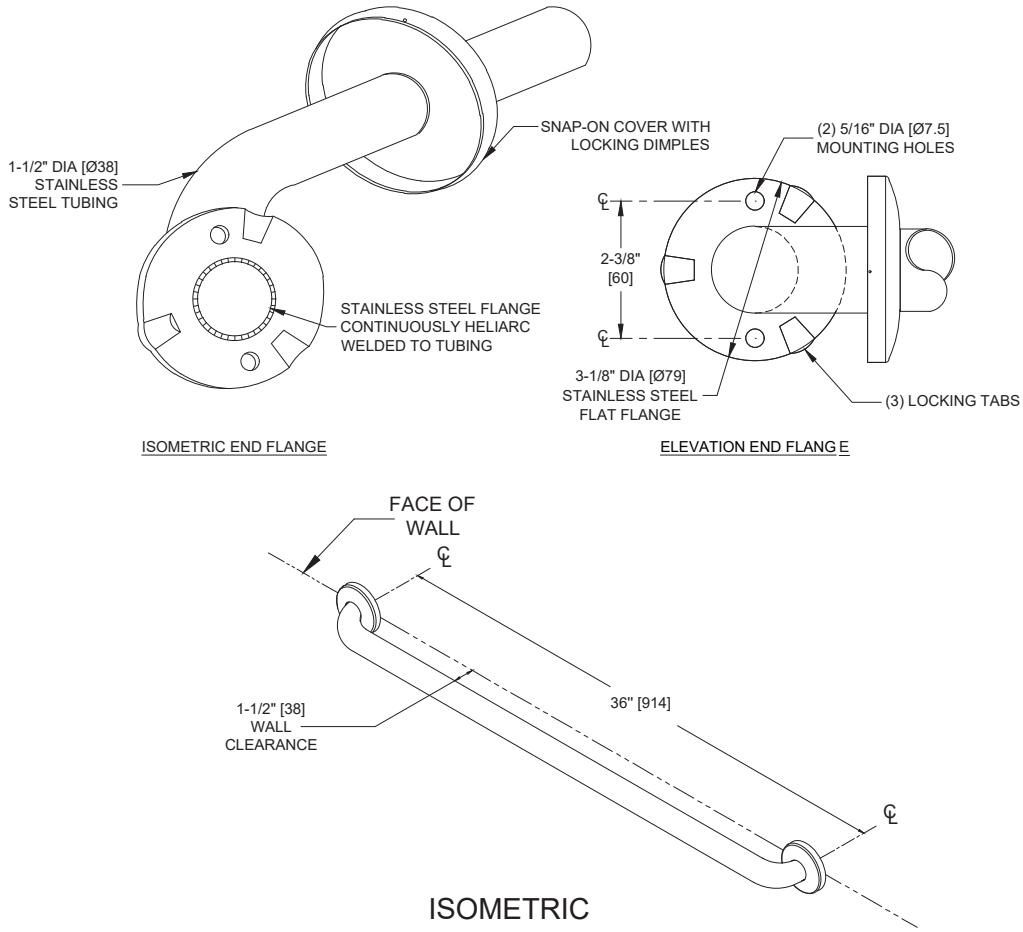

NOTE:
ALL DIM'S INCH [MM]
ILLUSTRATION FOR REF ONLY AND NTS

Scan for Information

Sustainability/LEED

MR 4.1 (1) MR 6 (1) EQ 4.2 (1)
MR 4.2 (1) EQ 4.1 (1) EQ 4.4 (1)

Product Overview

Features include cover that snaps over mounting flange dimples to conceal screws and concealed mounting flange of 3-1/8" [79] O.D. with 2 screw holes and 3 locking dimples; 1/8" [3] thick, type 304 stainless steel. Cover is type 304 stainless steel with a White Powder Coated Finish and 22 gauge, 3-3/16" [81] diameter. 1-1/2" O.D [Ø38] exposed flange horizontal grab bar. - white powder coat finish.

Key Features & Specifications

- Straight Grab Bar
- Snap Flange - cover snaps over mounting flange to conceal screws
- White Powder Coated Finish
- Surface Mounted
- 18 gauge tubing with 1-1/2" Outside Diameter [Ø38]
- 36" [914] Length

Operation & Maintenance

Stainless Steel washroom accessory products require regular surface cleaning, much the same as stainless steel sinks, pots and pans and eating utensils. As long as a regular cleaning schedule is followed, the best method is cleaning with a soft clean rag moistened with a mild detergent, followed by a water-moistened clean rag and then a dry rag. For a "new" look, surfaces can be wiped with lemon oil applied by a soft polishing cloth to maintain sheen. Stainless Steel should be protected against muriatic acid and caustic or abrasive materials, and harsh cleaning detergents [with pH outside the range 7 ± 1.5]. In the event such agents cause discoloration, polishing with a stainless steel cleaner such as 3M™ Stainless Steel Cleaner & Polish® and a soft cloth on bright or mirror finishes, or for satin finish surfaces the Stainless Steel cleaner and 3M™ Scotch Brite® pad either blue (less aggressive) or green (more aggressive) is recommended.

Technical Information / Product Properties

Property	Value
Dimensions	18 gauge tubing with 1-1/2" Outside Diameter [Ø38] / 36" [914] Length
Construction	White Powder Coated Finish 18 gauge tubing with 1-1/2" Outside Diameter [Ø38]
Mounting	Surface Mounted
Capacity	ASI grab bars are designed to meet and exceed 2010 ADA Accessibility Standards and ANSI A117.1 that fabricated product shall be of adequate strength to support a load in excess of 250 pounds (113.4 kg). Mounting to the wall is a critical part of the system to meet this requirement. The fastener system must be adequately sized to withstand the shear, tension or pullout, and torsion loads generated by the maximum loading.

Installation

Use grab bar as template to mark mounting holes locations and pre-drill holes. Install bar using two (2) #10 self-threading flat head or oval head screws (by others) or other fastener system (by others) to suit conditions for each flange. Appropriate anchoring and backing must be provided in accordance with local building codes or as specified on Architects Plans prior to wall finishing. For compliance with 2010 ADA Accessibility Standards install unit so that the top of the grab bar is 33" [840] minimum Above Finished Floor (AFF) to 36" [915] maximum AFF. Anchors are available from ASI and must be specified separately for each grab bar style scheduled (see 3900 series).

Grab Bar Configurations https://americanspecialties.com/wp-content/uploads/grabbarconfig.pdf

Warranty

One (1) Year from date of Invoice

Manufacturer reserves the right to make changes to the design, dimensions or functionality of the product without formal notice.

***AMERICAN SPECIALTIES**, INC.*
441 Saw Mill River Road, Yonkers, NY 10701
(914) 476.9000 • (914) 476.0688
www.americanspecialties.com

MODEL №:	0620
ISSUED:	01/87
REVISED:	19 FEB 2018

CHANNEL FRAME MIRROR

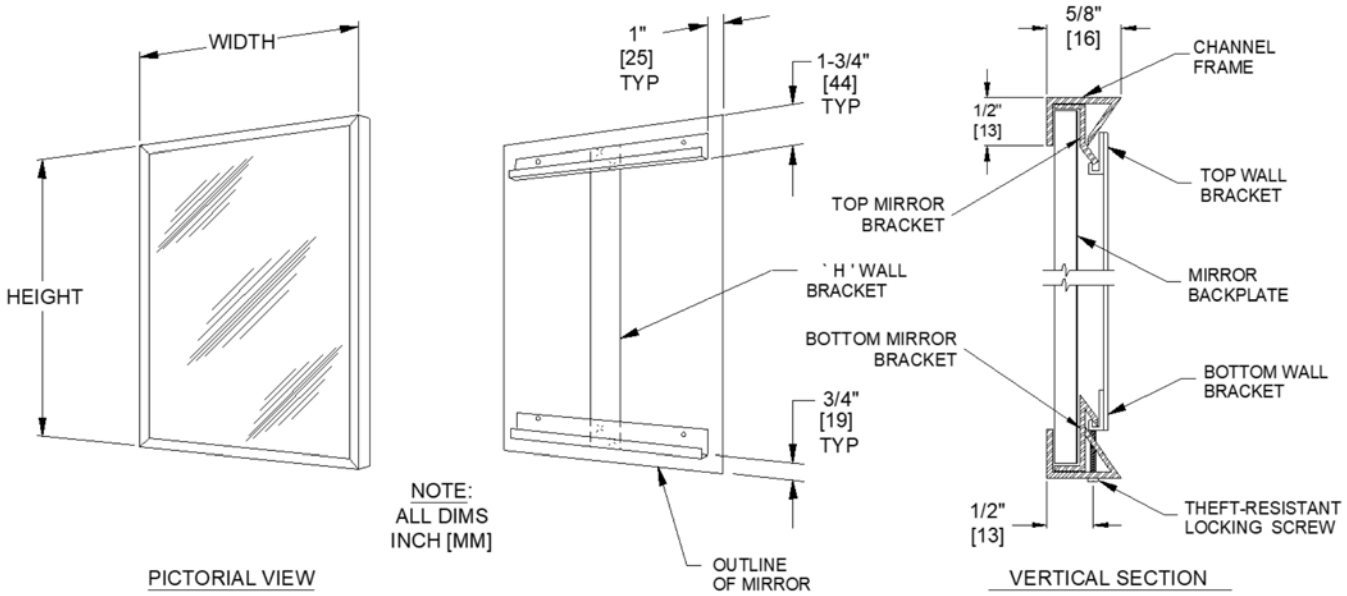

SPECIFICATION

Channel Frame Mirror shall have frame fabricated of alloy 18-8 stainless steel, type 304, 20 gauge with mitered corners. Mirror glazing shall be _____(insert glazing option) and shall be warranted for 15 years against silver spoilage. All edges of mirror shall be protected by friction and chafe absorbing fillers. Back of mirror shall be protected by full size shock-absorbing water-resistant filler and full size one piece 20 gauge corrosion protected steel. Top and bottom wall mounting brackets shall be fabricated of 20 gauge corrosion protected steel and shall be spot welded into **"H"** hanger. Mirror shall be secured to lower bracket with a Phillips Pan Head locking screw.

Channel Frame Mirror shall be Model № 0620-_____(insert glazing option)_____ (note size, W x H) as manufactured by American Specialties, Inc., 441 Saw Mill River Road, Yonkers, New York 10701-4913

MATERIALS

Frame: 18-8, type 304, 20 gauge (.036" <.91mm> thick) stainless steel. Roll-formed one piece construction. Exposed surfaces have a № 4 satin finish. Edges and corners are burr free.

Glass: Standard glazing is № 1 quality, 1/4" (6.4mm) thick plate/float, silver coated and hermetically sealed with a uniform copper plating, and warranted against silver spoilage for 15 years. Mirrors meet Federal Spec DD-M-411C, ASTM C- 1503, and ASTM C-1036-91.

Filler: Expanded polyethylene microcell foam sheet material, abrasion resistant and shock absorbing, water resistant, 1/8″ inch (3.2mm) total layer thickness.

FABRICATION NOTE FOR SPECIFICATION

Mirrors larger than 21sq. Ft. (1.95m^2) are fabricated in two (2) or more sections to provide installation and handling ease.

INSTALLATION

Install "H" wall brackets level and plumb per diagram location using **ONLY** № 8 or № 10 Pan Head screws (by others). Hang mirror on brackets and tighten locking screw (№ 6-32F x 3/4" Philips Pan Head, supplied separately taped to mirror back) at bottom (note: this screw should be started prior to hanging mirror on wall bracket). For compliance with 2010 ADA Accessibility Standard, bottom edge of reflecting surface should be no higher than 40" (1016mm) above finished floor.

GLAZING OPTIONS

Units are supplied with 1/4" thick plate glass. Other glazing options are available. For a complete description of any other available glazing, see the **MIRROR GLAZING OPTIONS** chart.

THIS MANUFACTURER RESERVES THE RIGHT TO MAKE CHANGES IN DESIGN OR DIMENSIONS WITHOUT FORMAL NOTICE

AMERICAN SPECIALTIES, INC.
441 Saw Mill River Road, Yonkers, NY 10701
(914) 476.9000 • (914) 476.0688
www.americanspecialties.com

MODEL №:	GLAZINGS
ISSUED:	1-87
REVISED:	22 MAY 2014

MIRROR GLAZING OPTIONS

GLAZING SUFFIX	DESCRIPTION
A	Plate Glass - 1/4" (6.4mm) thick № 1 quality polished, silver coated and hermetically sealed with a uniform coating of electrolytic copper plating. Mirrors meet Federal Spec. № DD-M-411C, ASTM C-1503 and ASTM-C-1036-91. Image quality: Excellent
B (1,2,3)	Tempered Glass - 1/4" (6.4mm) thick polished tempered glass with two coats of silver applied. Electroplating with a heavy uniform coating of copper hermetically seals the silver. Back of mirror is finished and protected with a thick coat of heavy waterproof paint. Glazing meets Federal Specification № DD-G1403B, Amendment 1, ASTM C-1503 and ASTM-C-1048-92. Image quality: Good
C (1,2,3)	Metal Mirrors - Shall be Type 304 alloy 18-8 stainless steel, 20 gauge polished to a № 8 mirror finish. Image quality: Good
D (1)	Lexan Dura-Mirror - 1/4" (6.4mm) thick polycarbonate sheet, highly impact resistant. Mirror face is provided with a thick removable masking to prevent scratching during installation. Image quality: Very Good
E (1)	Plexiglas® - Shall be 1/4" (6.4mm) thick acrylic plastic, lightweight and highly shock resistant. Image quality: Very Good
L (1)	Mirror is fabricated with an interlayer of 1/32" (.8mm) thick vinyl bonded between two 1/8" (3mm) thick sheets of № 1 quality polished plate glass with back silver coated and hermetically sealed with a uniform coating of electrolytic copper plating. Back of mirror is finished and protected with a thick coat of heavy-duty waterproof paint. Laminated glass meets the performance criteria of Federal Spec. № DD-M-451 and ANSI Z87.1 specifications and complies with CPSC standards 16 CR 1201 (1) 11. Image quality: Excellent

NOTES

1. Glazing types indicated are particularly suited to applications where frequent breakage and/or security problems exist. These surfaces are best specified for use in prisons, schools, police stations, hospital wards, etc., where shards of broken glass might possibly be used as weapons.

2. The reflective quality of these mirror types is not as true as plate glass.

3. ASI will not accept returns of these mirror types based upon claims of distortion in reflective properties.

THIS MANUFACTURER RESERVES THE RIGHT TO MAKE CHANGES IN DESIGN OR DIMENSIONS WITHOUT FORMAL NOTICE

Soap Dispenser (Liquid) Vertical – Matte Black Powder Coated Stainless Steel – Surface Mounted

Soap Dispensers

MasterFormat Section 10 28 13

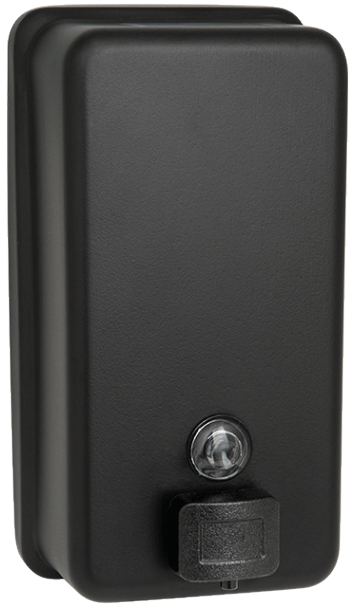

Scan for Information

Sustainability/LEED

MR 4.1 (1) MR 6 (1) EQ 4.2 (1)

MR 4.2 (1) EQ 4.1 (1) EQ 4.4 (1)

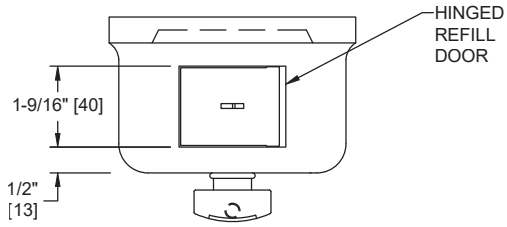

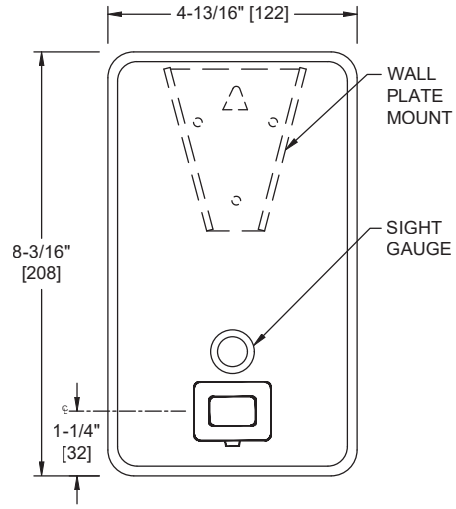

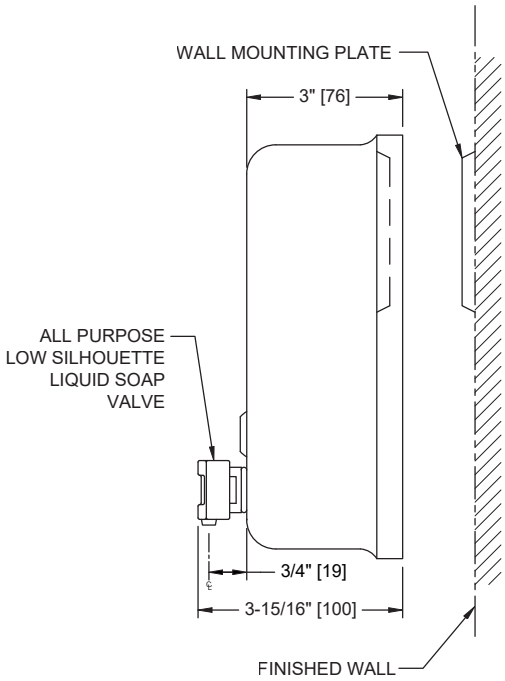

NOTE:
ALL DIM'S INCH [MM]
ILLUSTRATION FOR REF ONLY AND NTS
SEE SOAP DISPENSER CARE & MAINTENANCE
DOCUMENT ONLINE FOR CLEANING

Product Overview

40 fl. oz. (1.2 L) capacity soap dispenser in Matte Black Powder Coated Stainless Steel comes with an all purpose valve and a tamper-resistant refill indicator. Push button to dispense soap. Unit is refilled through hinged door at top requiring special key (supplied) to open. Soap tank will continue to feed properly until soap level is below valve intake port. Tank supply is replenished manually. Soap Requirements: Proper usage of this dispenser requires, that only soap within the following range for viscosity and pH may be used. Viscosity Range (mPa•s or cP): 100 – 3500 pH Range: 5.5 ~ 8.5. Soaps containing reportable salts, chlorides and alcohols should be avoided.

Key Features & Specifications

- Vertical space saving footprint
- All purpose valve and a tamper-resistant refill indicator.
- Type 304 Stainless Steel - Matte Black Powder Coated
- Surface Mounted
- Manual Push Button Operation
- Liquid Soap - 40 oz. (1.2 L) Capacity

Operation & Maintenance

Push button to dispense soap. Unit is refilled through hinged door at top requiring special key (supplied) to open. Soap tank will continue to feed properly until soap level is below valve intake port. Tank supply is replenished manually on cycle determined by maintenance needs.

Technical Information / Product Properties

Property	Value
Dimensions	4-13/16" x 8-3/16" x 3-15/16" [122 x 208 x 100] Spout projection: 3/4" [19]
Construction	Type 304 Stainless Steel - Matte Black Powder Coated
Mounting	Surface Mounted
Options	N/A

Installation

Unit is surface mounted to wall or partition with a wall mounting plate (supplied) and screws (by others). Unit is secured to interlocking wedge bracket and locked in place by a locking screw (supplied) installed through hinged refill door. Recommended installation for general utility is 42" [1066] Above Finished Floor (AFF) or 6" [152] min above washbasin. For compliance with 2010 ADA Accessibility Standards and 2015 ABA Standards, install unit with centerline of valve button no higher than 48" [1219] AFF.

Warranty

One (1) Year from date of Invoice

Manufacturer reserves the right to make changes to the design, dimensions or functionality of the product without formal notice.

AMERICAN SPECIALTIES, INC.
441 Saw Mill River Road, Yonkers, NY 10701 (914) 476-9000
www.americanspecialties.com

MODEL No:	0347
ISSUED:	7-05
REVISED:	6-06

SURFACE MOUNTED VERTICAL SOAP DISPENSER

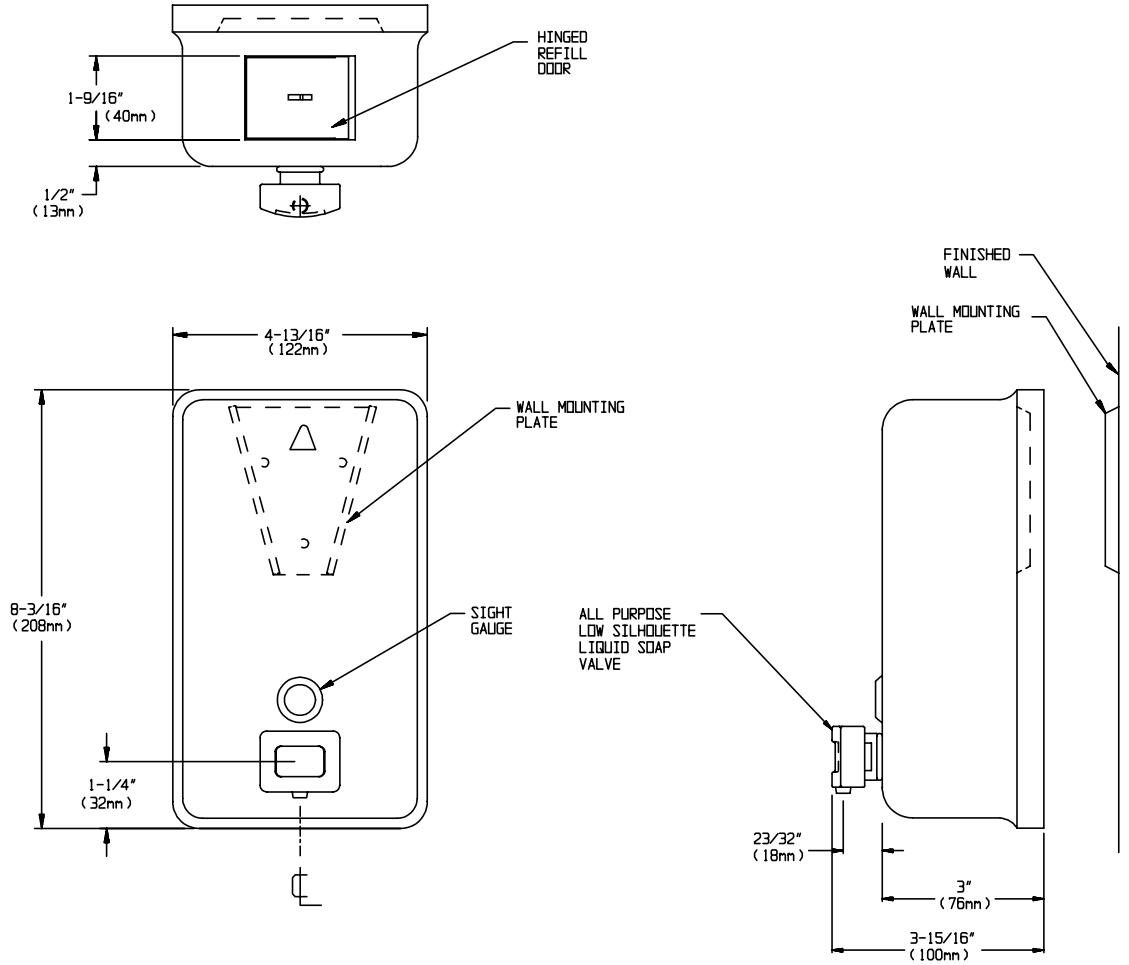

SPECIFICATION

Surface Mounted Vertical Soap Dispenser shall have a capacity of 40 fluid oz. (1.18 liter) of liquid or lotion soaps, synthetic detergents and antibacterial soaps containing PCMX and/or Triclosan. Dispenser shall be fabricated of 20 gauge stainless steel, alloy 18-8 type 304. All exposed surfaces shall be Nº 4 satin finish. Valve shall be constructed of a plastic valve body and push button with stainless steel and plastic internal parts. Valve operation shall comply with ADA Accessibility Guidelines by requiring no more than 5 lbs_f (22.2 Newtons) pressure to actuate and require no grasping or twisting by operator. A tamper resistant sight gauge shall be provided. Unit shall have a hinged stainless steel refill door on top of unit, which is opened with special key provided.

Surface Mounted Vertical Soap Dispenser shall be Model Nº 0347 of American Specialties, Inc., 441 Saw Mill River Road, Yonkers, New York 10701-4913

INSTALLATION

Unit is surface mounted to wall or partition with a wall mounting plate (supplied) and screws (by others). Unit is secured to interlocking wedge bracket and locked in place by a locking screw (supplied) installed through hinged refill door. Recommended installation for general utility is 42" (1066 mm) AFF or 6" (152mm) minimum above washbasin.

OPERATION

Push button to dispense soap. Unit is refilled through hinged door at top requiring special key (supplied) to open. Soap tank will continue to feed properly until soap level is below valve intake port. Tank supply is replenished manually on cycle determined by maintenance needs.

THIS MANUFACTURER RESERVES THE RIGHT TO MAKE CHANGES IN DESIGN OR DIMENSIONS WITHOUT FORMAL NOTICE

Moisture Guard™ Edge Banding: *Available on all partition doors, panels, pilasters and urinal screens in 48 colors.*

MOISTURE GUARD™ PLASTIC LAMINATE

48 COLORS IN 48 HOURS*

Introducing the new Plastic Laminate Partitions with Moisture Guard™ Edge Banding. Our Moisture Guard™ Edge Banding fuses with the substrate creating a seamless beveled profile that elegantly eliminates any unsightly black lines that appear in standard Plastic Laminate.

ASTM tests on Moisture Guard™ Edge Banding confirms 3X greater durability with increased resistance to moisture and humidity than standard Plastic Laminate.

Our Plastic Laminate with Moisture Guard™ Edge Banding is now backed with an **industry leading exclusive five-year warranty.**

NEW 48 Colors in 48 Hours. We have increased our selection of Moisture Guard™ Edge Banding to **48 colors** and patterns to offer you even greater choice in durability and elegance… **AND** we will ship you these colors in **48 hours*** from the time you approve your order.

To save you even more time our **Easy Stall Shoe**** speeds up the installation process.

**48 Colors in 48 hours are only available in Floor Anchored/Overhead Braced.*
***Easy Stall Shoe in Floor Anchored/Overhead Braced Only.*

ASi® Accurate Partitions

November 20, 2017

ASI Mirrors are fabricated from plate glass or an alternate reflective surface. Frames are type 304 (18-8) stainless steel. Mistreatment will void compliance with our warranty and silver spoilage will not be covered.

BELOW ARE A FEW TECHNIQUES FOR PROPER CARE AND MAINTENANCE OF MIRRORS:

- Check your shipments on arrival. Look for noticeable mishandling during shipment. If necessary, contact your ASI representative immediately for assistance. Contact the carrier's agent and get an inspection report. If there appears to be moisture present, the mirrors should be unpacked and allowed to dry.

- Store in dry, ventilated spaces. Mirrors exposed to high humidity or chemical fumes can suffer deterioration.

- Store vertically; glass exhibits more strength and fewer strains. Do not pull mirrors from the ends of case. Do not lay mirrors flat.

- Unpack as soon as possible, to allow moisture during shipment to dissipate.

- Use gloves when handling, to prevent damage to the face or backing.

- The safest cleaner is clean, warm water with a soft cloth. An approved glass cleaner such as Windex®, Glass Plus® or similar products may be used. Avoid heavy soaking!

- Do not use any acid, alkali, abrasive or concentrated ammonia based cleaners. These cleaners will attach the mirror surface and edges, and possible the stainless steel frames.

- Never spray any cleaner directly onto a mirror. Instead, apply the cleaner to a soft cloth and then wipe the mirror. This will prevent "puddling" at the mirror edge where the cleaner could attack the backing and/or attack the mirror silvering.

- Always use clean, soft, grit-free cloths to reduce chances of scratching the surface.

- Do NOT hose down the mirror. Instead, use a cleaner-moistened lint-free glass wiping cloth for dirt removal and another one for wipe off and polish drying.

Date Issued: January 1, 2021

All ASI products are designed and manufactured to high quality standards to ensure many years of satisfactory service. To assure long life and beauty, the product should be cleaned, protected, and maintained. Usually units that have just been installed will require cleaning after the protective plastic film has been removed. Depending upon how long the units have been in storage prior to installation, a product such as 3M™ Adhesive Remover (6041) may be helpful in removing any stubborn vinyl & adhesive residue.

Stainless Steel washroom accessory products require regular surface cleaning, much the same as stainless steel sinks, pots and pans, and eating utensils. As long as a regular cleaning schedule is followed, the best method is cleaning with a soft clean rag moistened with a mild detergent, followed by a water-moistened clean rag and then a dry rag. For a "new" look, surfaces can be wiped with lemon oil applied by a soft polishing cloth to maintain sheen.

Stainless Steel should be protected against muriatic acid and caustic or abrasive materials, and harsh cleaning detergents [with pH outside the range 7 ± 1.5]. In the event such agents cause discoloration, polishing with a stainless steel cleaner such as 3M™ Stainless Steel Cleaner & Polish® and a soft cloth on bright or mirror finishes, or for satin finish surfaces the Stainless Steel cleaner and 3M™ Scotch Brite® pad either blue (less aggressive) or green (more aggressive) is recommended.

Plastic, Phenolic, or Laminate materials can be maintained with general-purpose protectant products such as Armor All®. Do not soak edges of laminated products as this may allow moisture to seep into edge seams, leading to delamination as the core swells over time.

Soap Dispensers located in low traffic areas should have the soap dispenser valves wiped down to remove any air-hardened soap residue left on the nozzle spouts. This should be done as part of the day-to-day janitorial maintenance routine covering them. General cleaning on a regular schedule is adequate for soap dispensers in higher traffic areas, with no special attention required. Specific soap dispenser management information is on the product TDS and Soap Dispensing Requirement Chart available online.

Hand Dryers are designed to be low-maintenance. To ensure optimum performance and warranty compliance, periodic cleaning of the unit is recommended. There are few-to-no user adjustable or serviceable parts inside the housing. General cleaning of the exterior housing and nozzle surfaces on a regular schedule is adequate, with no special attention required. Any general-purpose cleaner, such as Formula 409® or Windex® is appropriate for porcelain enameled surfaces. For Stainless Steel or ABS plastic covers, follow the same guidelines for Stainless Steel cabinets. Periodically, the sensor lens (if so equipped) should be wiped clean with a soft towel dampened with mild soap and water (NOT SOAKED), and rinse-wiped and dried. In highly dusty environments, the inside of the nozzle and/or exhaust screen should be examined regularly for dust and/or lint build-up, which should be removed. If necessary, maintenance crews can open the housings with special security wrenches (after the power has been shut off) to clean the inside of the screen and/or the blower unit and heating element. Dryer filters (equipped on select models) should be regularly replaced. See dryer specific TDS and Operating Instructions and Parts Manual for additional information.

NOTES FOR DRYERS

- Replacement parts are available for select internal components, with service kits including instructions available for major sub-assemblies. These are designed to be installed by qualified technicians ONLY.
- DO NOT SOAK any dryer unit. They are not designed for wet wash-down. Exterior surfaces may only be wiped. Refer to cleaning instructions in unit model manual.
- DO NOT ALLOW any in-housing access or "service" by unqualified personnel.

NOTES FOR MIRRORS

- Glass surfaces should be cleaned with any suitable non-abrasive standard glass cleaner, such as Windex® or Glass Plus®. Do NOT use cleaner with ammonia or bleach. Plastic surface mirrors {D& E glazing only} can be washed with mild soap and damp cloth with light pressure to remove splash and spatter, taking care to avoid mirror edges. To remove grease, oil or tar deposits on the mirror surface, either kerosene or hexane may be used. Do not use kitchen cleaning sprays,window cleaners, scouring compounds, or any other unlisted chemical product cleaners.
- For protection each D and E glazing mirror has a durable paint backing and a removable masking on the front. This masking should remain in place to protect the mirrors during all phases of installation. Plastic mirrors should be handled with the masking left on. Care should be taken to avoid sliding the mirrors against each other.
- After installation if there is trouble removing the masking, aliphatic naptha, kerosene, or distilled alcohol may be used to moisten and soften the adhesive. Do not use any other unlisted chemical product cleaners or sharp objects to remove the masking.
- For long term maintenance of surface gloss the plastic mirror may be occasionally polished using a clean flannel cloth and good plastic cleanser and/or polish, e.g. SC Johnson Pledge®. Follow the polishing instructions on the container label.
- To repair vandalism fine scratches use a plastic scratch remover or compound cleaner and apply by hand polishing. Remove all residue and polish as above in bullet 3. Deep scratches can be smoothed out by lightly sanding with 400 grit wet paper, and then following the fine scratch step and polishing step as above.
- Care should be taken to ensure that cleaners and water are not captured in the frame or behind mirrors to avoid damage.

Additional mirror care information is in the Mirrors Proper Care & Maintenance Guide available online.

GENERAL NOTES:

Any effects of vandalism or tampering should be repaired immediately by the user/owner to prevent any product performance deterioration. Products severely damaged must be replaced before they become hazardous. Proper maintenance procedures are the only prescribed method of ensuring a long, trouble-free life for the product. Properly maintained facilities also contribute to the general feeling of well-being that characterizes the ambiance of a hygienic installation. Failure to follow proper maintenance procedures may shorten service life and will reduce product aesthetic quality level over time. Such a condition tends to encourage the disrespect that engenders overt vandalism and may forfeit any user/owner claims to warranty.

CLEANING OF EAGLESTONE ADA SIGNS

Signs can be cleaned using a mixture of a gentle soap and lukewarm water. Apply with mixture using a clean soft cloth or sponge. Rinse with clean lukewarm water. Allow to air dry or hand dry with clean soft cloth. Harsh, abrasive or cleaners containing alcohol can damage the sign and should not be used. Do not apply direct heat to the sign as this may cause color and sign distortion.

P.O. Box 41054 Cleveland, OH 44141
Fax: (440) 848-8480 Phone: (440) 840-3415
info@eaglestoneproducts.com